UNITY | REAR LOUNGE

2026 MANUAL



LEISURE
TRAVEL VANS

⚠ WARNING

Operating, servicing and maintaining a passenger vehicle, pickup truck, van, or off-highway motor vehicle can expose you to chemicals including engine exhaust, carbon monoxide, phthalates, and lead, which are known to the State of California to cause cancer and birth defects or other reproductive harm. To minimize exposure, avoid breathing exhaust, do not idle the engine except as necessary, service your vehicle in a well-ventilated area and wear gloves or wash your hands frequently when servicing your vehicle.
For more information go to www.P65Warnings.ca.gov/passenger-vehicle

TABLE OF CONTENTS

1. INTRODUCTION
- Supplemental Manual....1-1
- Motorhome Information Kit....1-2
- Options and Equipment....1-2
- Service Assistance....1-2
- Reporting Safety Defects....1-3

2. GENERAL INFORMATION
- Floor Plan....2-1
- Exterior Equipment Location....2-2
- Beds and Seating....2-4
  - Rear Lounge....2-4
  - RL Front Bed (Optional)....2-6
  - TV Location....2-7

3. SCHEMATICS
- Electrical....4-1
  - 12 volt Electrical Reference....4-1
  - 120 Volt Electrical Reference....4-2
  - Electrical Schematic....4-3
- Plumbing....4-8
  - Water lines schematic....4-8
  - Drain line schematic....4-9
- Entertainment....4-10
- Satellite Pre-wire....4-11

1. INTRODUCTION

Congratulations! Thank you for selecting a Leisure Travel Vans Motorhome.

Welcome to the exciting world of motorhome travel and camping, with all the comforts of home with you, while you travel and enjoy the outdoors.

Your motorhome has been designed and manufactured to enhance your travel and camping experience and to provide you with safe, efficient and trouble-free operation.

Before your first drive, become familiar with the operation of the vehicle chassis and all functions and operations of the motorhome. Spend adequate time with your dealer when you take delivery to learn all you can about your new motorhome.

KEEP the Motorhome Information Kit within your motorhome for readily available reference.

PASS this manual, the Chassis Operation Manual and the Motorhome Information Kit to any subsequent operator or owner.

For clarification or further details on any of the enclosed information, please contact:

Your Leisure Travel Vans Dealer or Triple E RV Customer Service at:

Email:	info@tripleerv.com
Toll Free:	877-992-9906
Telephone:	204-325-4361
Fax:	204-325-5241

SUPPLEMENTAL MANUAL

This manual was prepared to aid the operator and occupants in the operation and care of the motorhome by giving specific information about your model. There are many options to Leisure Travel Vans, so ensure that you are familiar with your motorhome's systems and equipment. All operators and occupants of the motorhome should read, understand and follow the instructions in this manual, the vehicle chassis manual & the information contained in the Motorhome Information Kit provided with your new motorhome.

Your motorhome contains a number of systems, components, equipment, and appliances manufactured by vendors that supply components for Triple E RV. These vendors are unrelated to Triple E RV.

Before operating the motorhome for the first time – even if an experienced motorhome operator – read and become familiar with all of the relevant manuals to your motorhome, components, equipment and appliances provided in the Motorhome Information Kit. Your familiarity with the detailed operation of your motorhome will assist in your safe, efficient and trouble-free motorhome operation.

MOTORHOME INFORMATION KIT

The Motorhome Information Kit includes but isn't limited to information on the components, equipment and appliances listed below (based on options selected).

- Refrigerator
- Stove top
- Furnace
- Electrical Panel
- Toilet
- Water Heater
- Water Pump
- Water Filtration
- Vent (roof)
- Fire Extinguisher
- Smoke Detector
- Thermostat
- CO Detector
- Propane Detector
- Gas Regulator
- TV Antenna
- TV/DVD
- Chassis
- Air Conditioner
- Generator
- Stabilizers/Leveling Jacks
- Rear View Monitor
- Inverter
- Entertainment System
- Safety
- Flooring and Countertops
- Electric Step
- Solar Panel
- Surge Protector
- Safe
- Awning

OPTIONS AND EQUIPMENT

Leisure Travel Vans are available in various sizes and floor plan configurations and with differing optional equipment. The equipment, accessories and components described in this manual may not apply in all respects to your motorhome. Read the material and manuals provided in the Motorhome Information Kit for detailed instructions regarding the equipment specific to your motorhome.

SERVICE ASSISTANCE

Your dealer will assist you with any additional information you need and will answer any questions you have about the operation of your motorhome. When it's time to service the vehicle, remember that your dealer knows your motorhome best and is dedicated to your satisfaction. Your dealer will provide quality maintenance and assistance during your period ownership. Triple E RV strongly recommends that you follow a regular maintenance schedule to keep your motorhome functioning at its best.

Call the following numbers if you require warranty assistance while traveling:

Triple E RV: 1-877-992-9906

Canada Sprinter Customer Service:
1-800-387-0100 www.thesprinter.ca

US Sprinter Customer Service:
1-877-762-8267 www.mbsprinterusa.com

Canada Ford Customer Service:
1-800-565-3673 www.ford.ca

US Ford Customer Service:
1-800-392-3673 www.ford.com

Emergency Roadside Service* Call:
1-877-219-3831
4287 Beltline Road, Box 198
Addison, Texas 75001

*This Emergency Roadside Service is available to owner of the motorhome during the first two years after purchase.

REPORTING SAFETY DEFECTS

If you suspect your motorhome has a safety defect that could cause injury or death, immediately contact Triple E RV. Also, contact the National Highway Traffic Safety Administration (NHTSA) in the US or Transport Canada to report your concern.

NHTSA will investigate the concern if there are a number of similar complaints. NHTSA has the authority to order a recall and repair campaign depending on the nature and severity of the problem.

You can reach the NHTSA by calling the Auto Safety Hot-line at 1-800-424-9393 (202-366-0123 in the Washington, DC, area) or by writing to NHTSA, US Department of Transportation, Washington, DC 20590. The hot-line also will provide you with additional information on motor vehicle safety.

In Canada, call 1-800-333-0510 or write to Transport Canada and Road Safety, 2780 Sheffield Road, Ottawa, Ontario K1B 3V9.

2. GENERAL INFORMATION

FLOOR PLAN

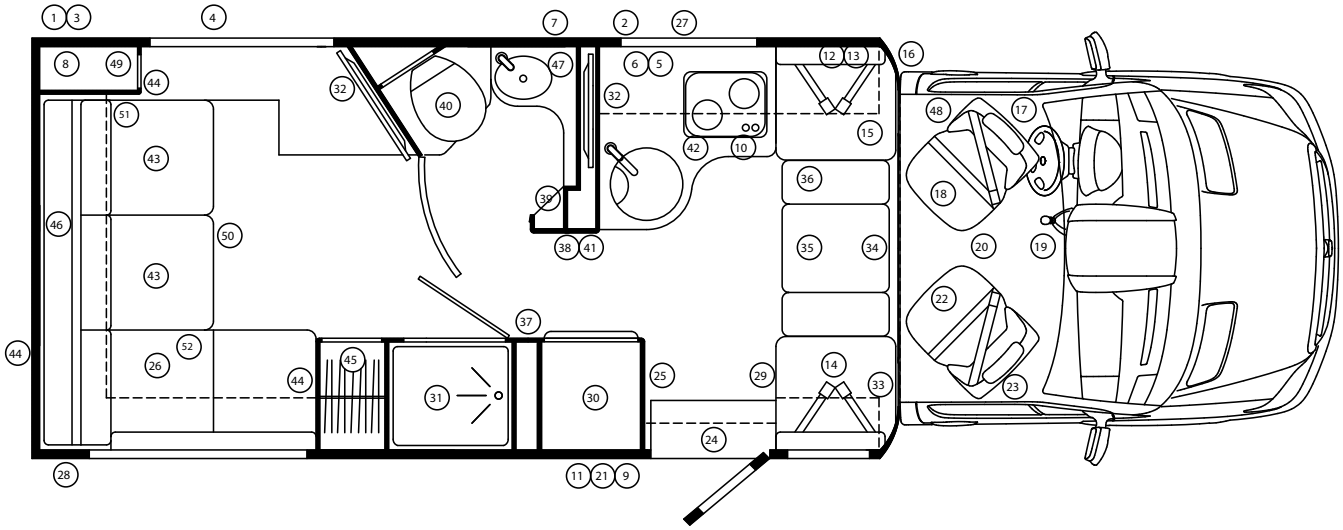

① Macerator Option Under Floor
② Sewer Hose Under Floor
③ Utility Center Under Floor
④ Egress Window
⑤ Water Pump Under Galley
⑥ Water Heater and Furnace Under Galley
⑦ Shore Power Plug
⑧ Tank Flush Non Return Valve Behind Access Cover in Wardrobe
⑨ Lithium batteries and Inverter In Compartment Under Floor
⑩ Water Tank/ Drain Under Floor
⑪ Step Switch, battery heat, G12 RTC shared 5A fuse in Battery compartment
⑫ Satellite Option Prewire and Component Connection Plate in Overhead Cabinet
⑬ TV Antenna Booster/WIFI Switch
⑭ Table Storage
⑮ Surge Protector/Transfer Switch Under Dinette Seat
⑯ USB Plug on Cab Upright
⑰ Chassis Battery Under Cab Floor 60Amp Fuse Location
⑱ Chassis Batteries Under Captain Seat
⑲ 12 Volt Plug and USB Plug
⑳ Swivel Seats
㉑ Solar Panel Controller and 30A fuse in Battery compartmnet
㉒ DC/DC Charger under seat
㉓ Awning Switch on Passenger Seat Pedestal
㉔ Water Heater Dial above Entrance Door
㉕ Battery Disconnect Switch on Cabinet Wall
㉖ Sofa
㉗ Generator Option Under Floor
㉘ Exterior BBQ Connection Under Floor
㉙ Fire Extinguisher
㉚ Fridge Below and Microwave Above
㉛ Shower
㉜ TV
㉝ MultiPlex Display
㉞ Smoke Alarm on Ceiling
㉟ Dinette
㊱ Breaker Panel
㊲ Propane/Carbon Monoxide Detector on Cabinet Face
㊳ Thermostat Sensor on Pantry Wall
㊴ MultiPlex G12 Panel Board behind Access cover
㊵ Toilet
㊶ Pantry
㊷ Galley
㊸ Recliner
㊹ USB Plug
㊺ Wardrobe
㊻ Murphy Bed
㊼ Water Filter in Vanity
㊽ Battery Power and Ignition Fuses under Driver Seat
㊾ Cushion Storage
㊿ Propane Tank Under Floor
(51) Plumbing Cleanout behind Bed Face
(52) Sofa

EXTERIOR EQUIPMENT LOCATION

PASSENGER SIDE VIEW

① Light
② Inverter and Battery Compartment
③ External Receptacle
④ Awning
⑤ Storage Compartment
⑥ BBQ Hook-Up
⑦ Entrance Step
⑧ Ladder (Optional)

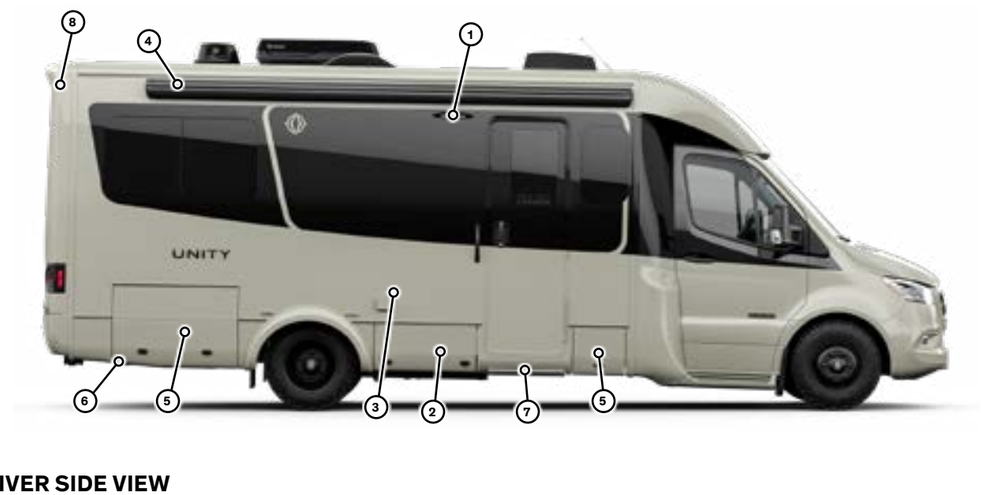

DRIVER SIDE VIEW

① Diesel Fill
② Generator Compartment
③ Storage Compartment
④ Utility Center
⑤ Shore Power Connection
⑥ Furnace Vent
⑦ Water Heater
⑧ Sewer Termination
⑨ Sewer Hose (Behind Doors)

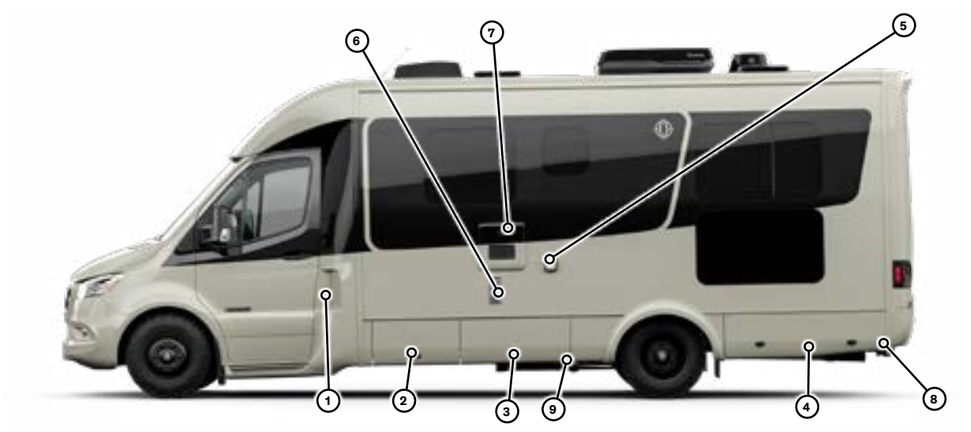

TOP VIEW

① Solar Panels
② Roof Vent
③ Skylight
④ Stack Vent
⑤ Satellite
⑥ A/C
⑦ TV/WiFi Antenna

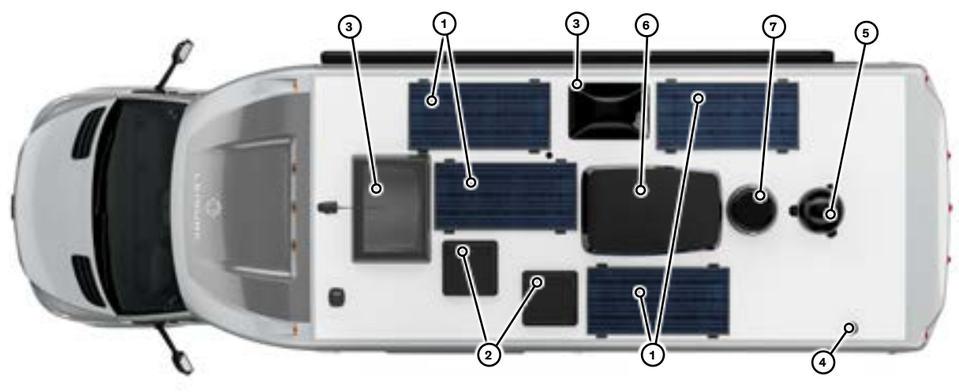

BEDS AND SEATING

REAR LOUNGE

LOWERING THE MURPHY BED

1. Remove the back rest cushions (7) from the Rear Lounge and set aside.

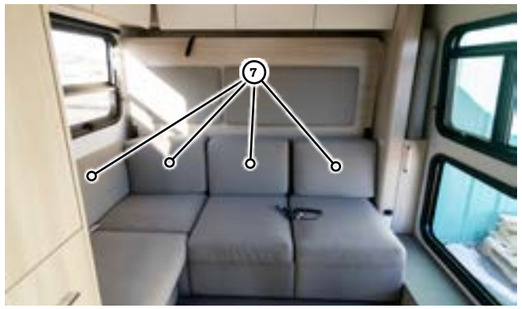

2. Raise the bed support (8) up until it clicks in to place.

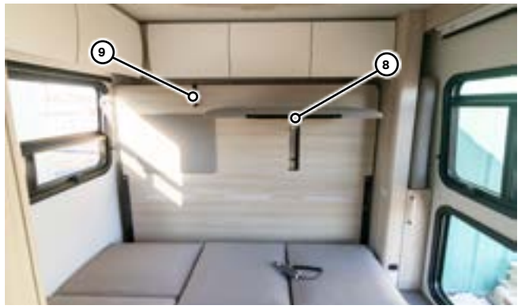

3. Pull the lock release strap (9) up to release the bed.
4. Slowly and carefully lower the Murphy bed. Ensure the Murphy bed locks into place once fully lowered by lifting slightly on the side of the bed. If bed is not locked, sit on corner of bed to apply additional downward pressure.



⚠ WARNING

Always ensure that the bed is locked when in the lower position. Failure to do so could allow the bed to close while occupied, causing serious injury or death.

RAISING THE MURPHY BED

1. Before raising the Murphy bed, be sure to unplug and remove any devices that may be in the rear cubby.

⚠ WARNING

Failure to unplug devices could potentially result in a fire if the device overheats.

2. Pull the lock release strap (10), and slowly raise the Murphy bed



⚠ CAUTION

Failure to pull the release strap will cause damage to the Murphy Bed.

3. Once raised, ensure the Murphy bed is secured by pulling slightly on the top edge. If bed is not locked in to place, push firmly along the top edge and test again.
4. Lower the bed support by lifting slightly, and pushing upwards in the center of the support (11), and gently lowering the bed support.

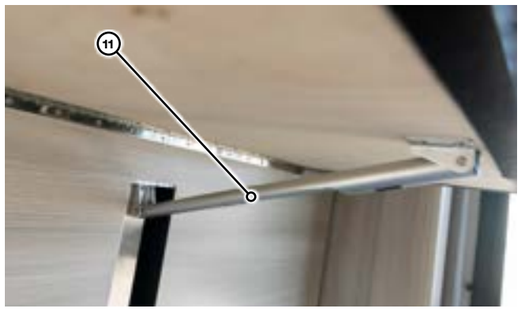

5. Replace the cushions on the rear lounge.

REAR LOUNGE FOOT RESTS

To raise or lower the foot rests on the Rear Lounge, you must either be connected to shore power, have the generator running, or have the inverter running. To raise or lower the foot rest, press the corresponding button on the remote (1) located between the lounge seats.



RL FRONT BED (OPTIONAL)

SETTING UP THE BASE

1. Rotate both Driver and Passenger cab seats (2) to face in to the coach.

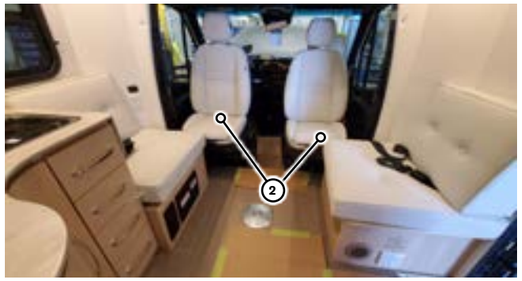

2. Remove the table top from it's storage location below the Passenger dinette (4).

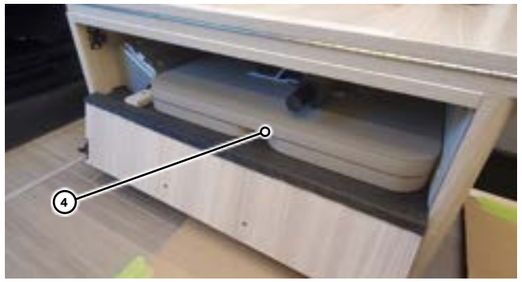

3. Remove the extra cushion from it's storage in the rear of the coach (5).

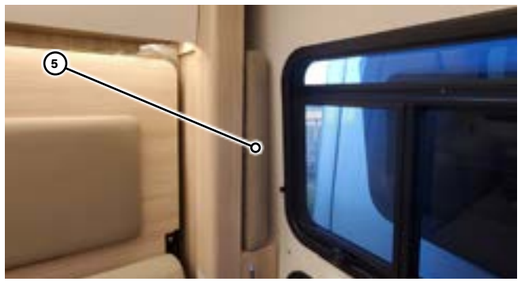

4. Remove the Dinette cushions and fold out both the Passenger side and Driver side dinette bases (6).
5. Place the table top in the rectangular cutout in the passenger side dinette fold out section .(7)

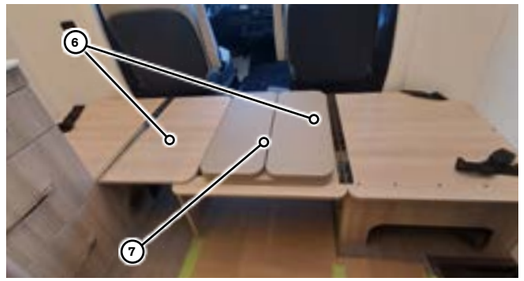

6. Place the cushion from the rear storage area on top of the table and the rest of the cushions as pictured. **NOTE:** Some of the cushions will not be used and can be set aside.



INFLATING THE AIR MATTRESS

1. Remove the air mattress and pump from the storage back
2. Inflate the small rectangular air mattress (8) with the pump and place between the driver and passenger seat.

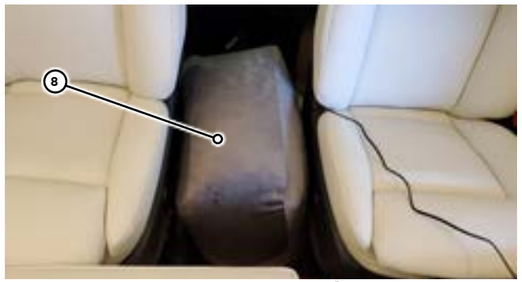

3. Inflate the large air mattress (9) and place on the base.



TV LOCATION

In the Unity RL, the TVs are located in the bedroom area (10), and in the front of the couch beside the entrance door (11).



3. SCHEMATICS

ELECTRICAL

12 VOLT ELECTRICAL REFERENCE

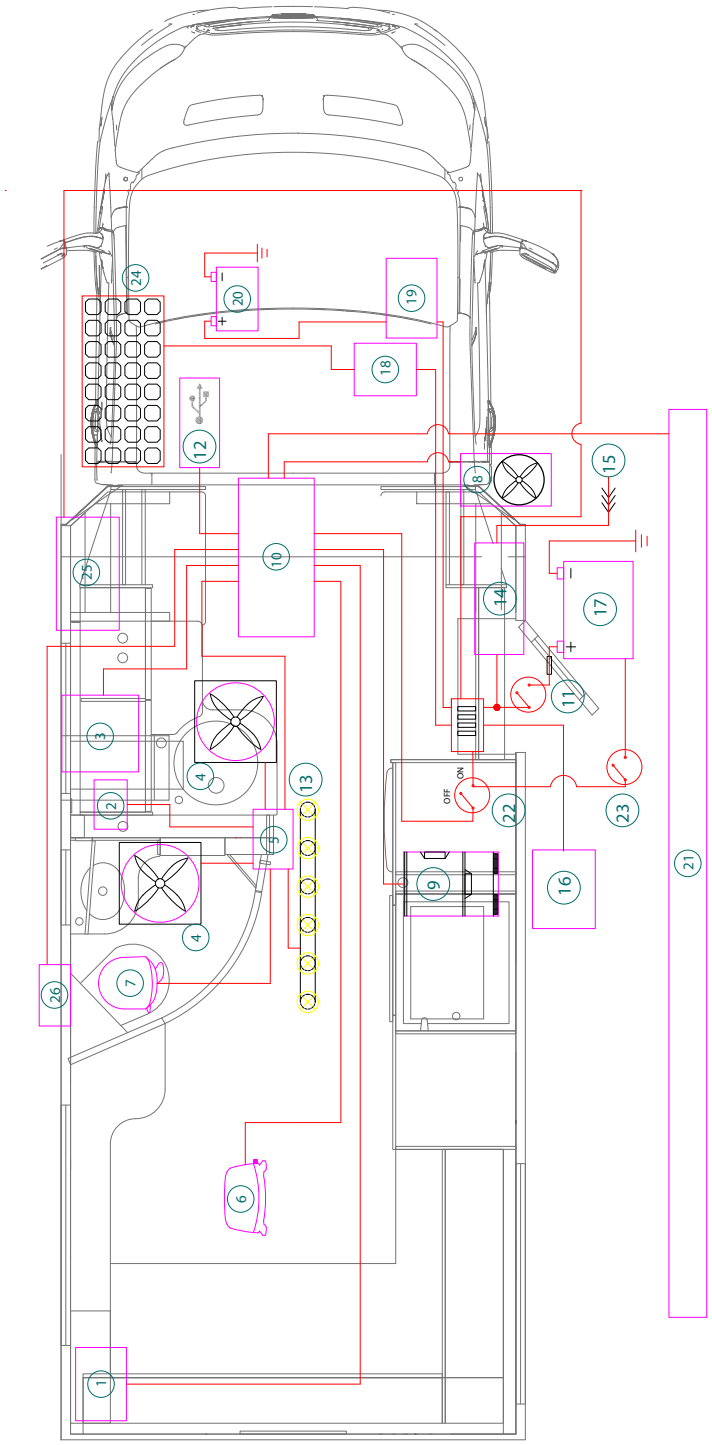

① Macerator Pump (Optional)
② Water Pump
③ Water Heater
④ Power Roof Vent (Washroom/Galley)
⑤ Multiplex System
⑥ Winegard Connect 2.0
⑦ Satellite Dish (Optional)
⑧ Furnace
⑨ Fridge
⑩ DC Fuse Panel
⑪ Battery Storage Switch
⑫ USB Chargers
⑬ Light Circuits
⑭ Inverter
⑮ 120V AC Power Input
⑯ Leveling Jacks (Optional)
⑰ RV Batteries
⑱ Solar Charge Controller
⑲ DC/DC Charger
⑳ Chassis Battery
㉑ Awning
㉒ Battery Disconnect
㉓ Lithium Battery Heat Enable Switch
㉔ Solar Panels (200W or 400W Optional)
㉕ Generator (Optional)
㉖ Macerator Toilet

120 VOLT ELECTRICAL REFERENCE

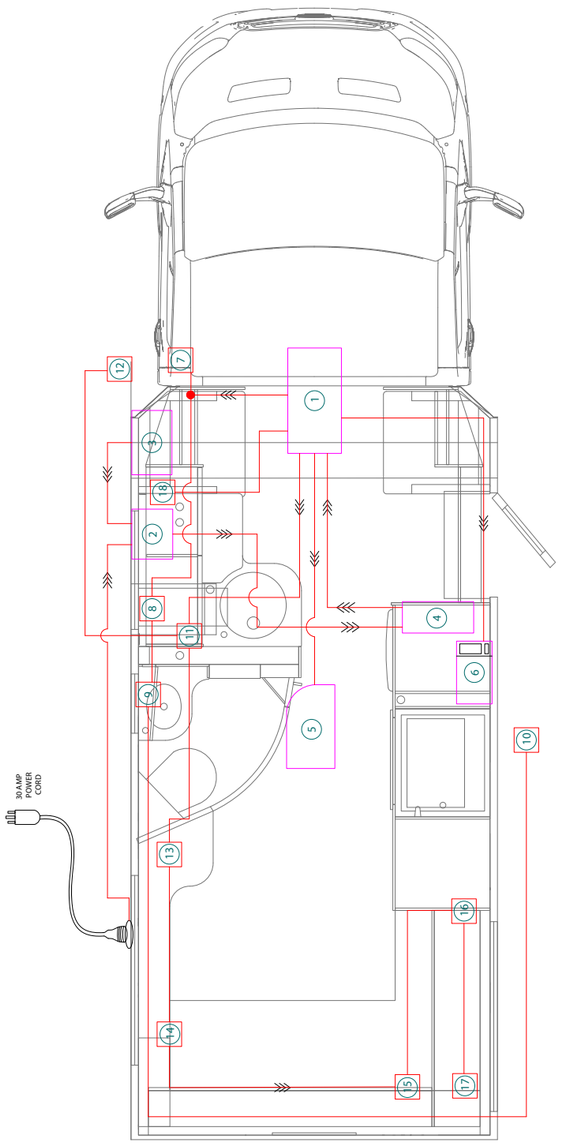

① AC Distribution Panel
② Transfer Switch/Surge Protector
③ Generator
④ Inverter/Charger
⑤ Air Conditioner
⑥ Microwave
⑦ Front Pillar Receptacle
⑧ Galley Receptacle
⑨ Washroom Receptacle
⑩ Exterior Receptacle
⑪ Front TV
⑫ Entertainment Receptacle
⑬ Bedroom TV Receptacle
⑭ Lounge Receptacle
⑮ Power Chairs Receptacle
⑯ Second Bed Receptacle
⑰ First Bed Receptacle
⑱ Induction Cooktop

ELECTRICAL SCHEMATIC

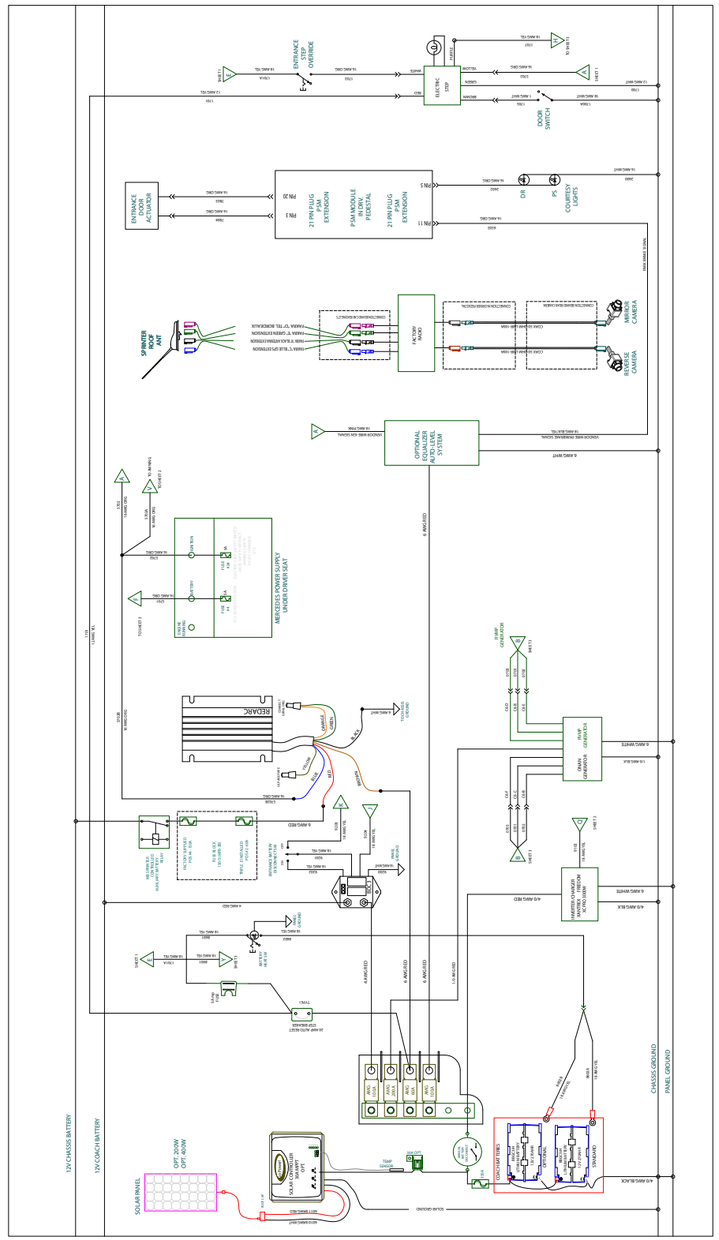

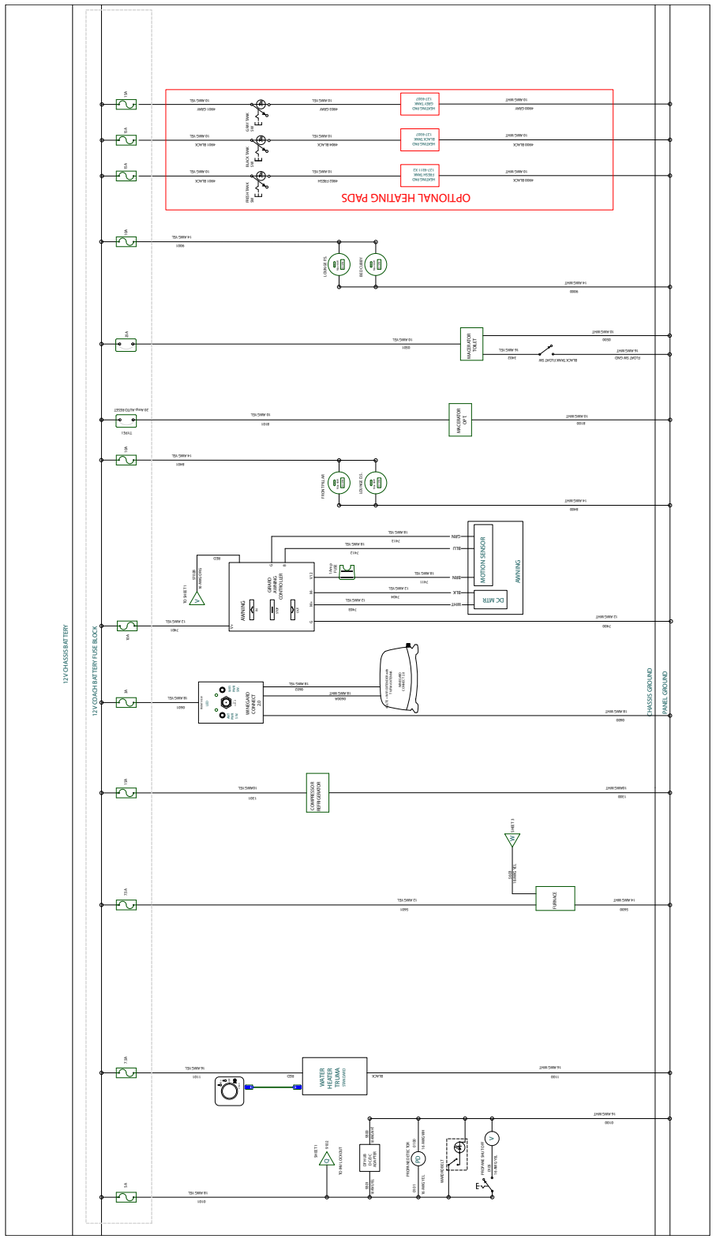
OPTIONAL HEATING PADS
12V CHASSIS BATTERY
12V COACH BATTERY FUSE BLOCK
CHASSIS GROUND
PANEL GROUND
MOTION SENSOR
AWNING
DC MTR
WATER HEATER TRUMA
FURNACE

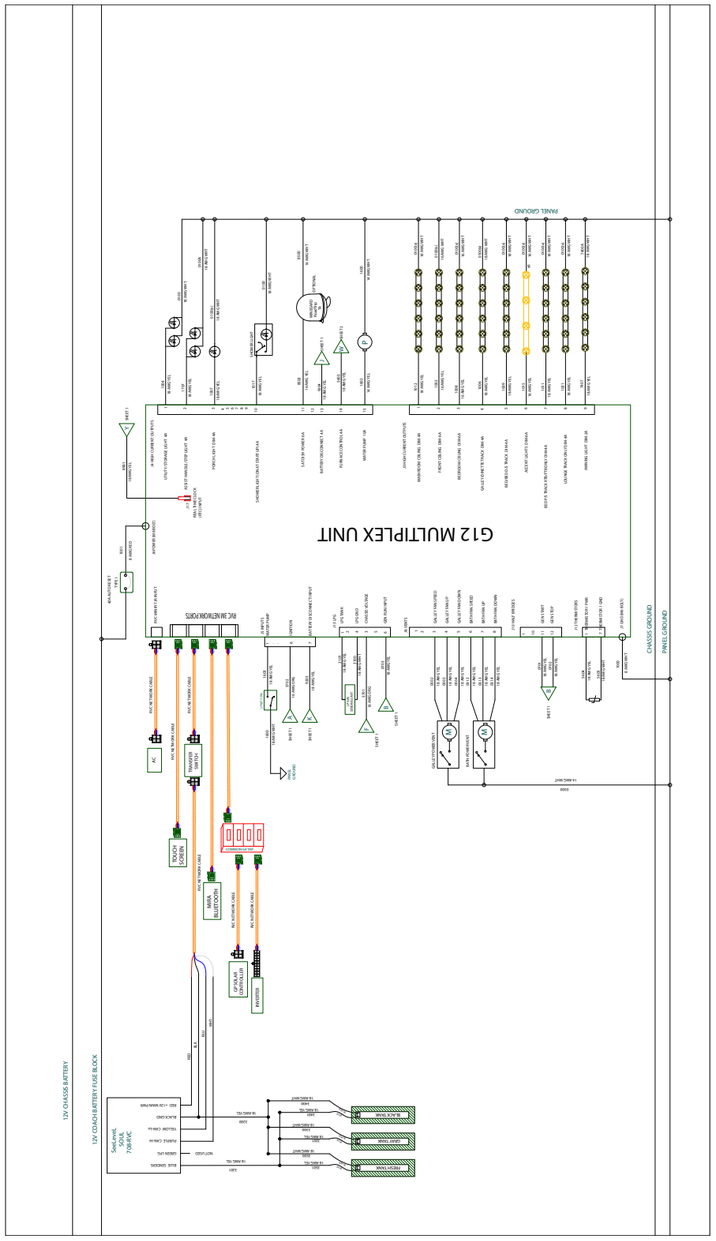
G12 MULTIPLEX UNIT
PANEL GROUND
CHASSIS GROUND
PANEL GROUND
12V CHASSIS BATTERY
12V COACH BATTERY FUSE BLOCK
TOUCH SCREEN
MIRA BLUETOOTH
GPSCAN CONTROLLER
RAVISTER

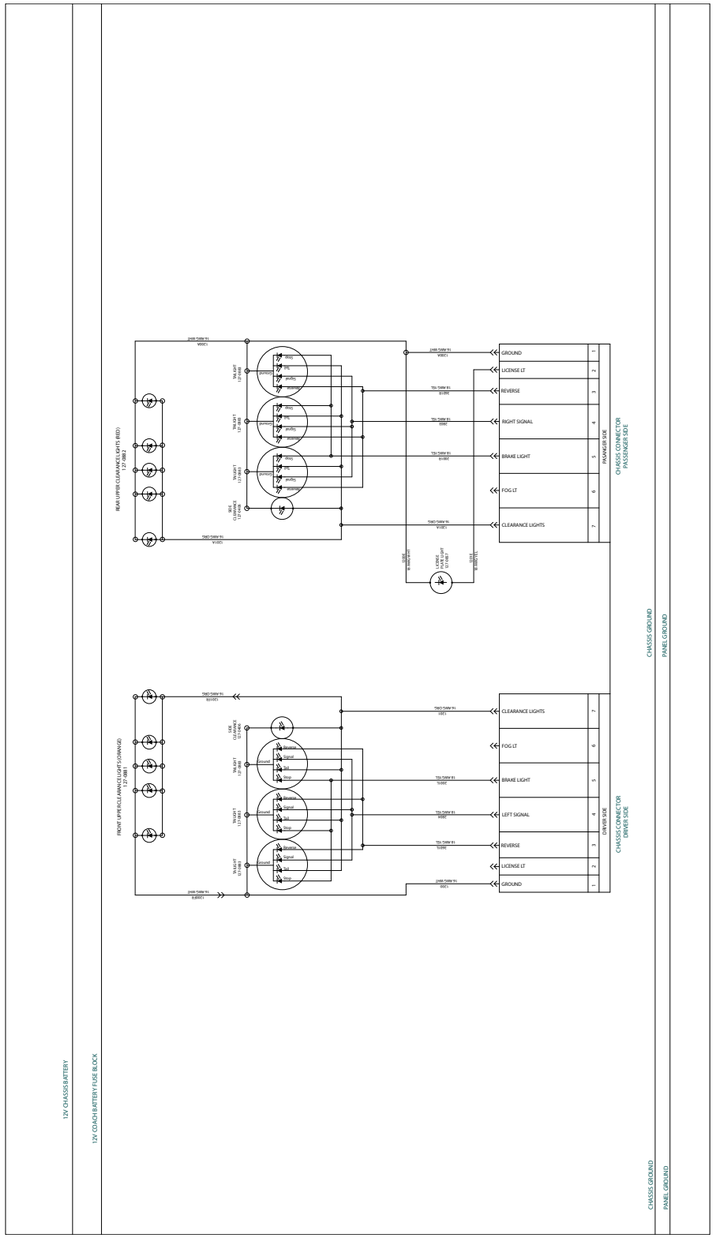
12V CHASSIS BATTERY
12V COACH BATTERY FUSE BLOCK
REAR UPPER CLEARANCE LIGHTS (RED) 127-0881
FRONT UPPER CLEARANCE LIGHTS (SORNING) 127-0881
GROUND
LICENSE LT
REVERSE
RIGHT SIGNAL
BRAKE LIGHT
FOG LT
CLEARANCE LIGHTS
LEFT SIGNAL
CHASSIS CONNECTOR PASSENGER SIDE
CHASSIS CONNECTOR DRIVER SIDE
CHASSIS GROUND
PANEL GROUND

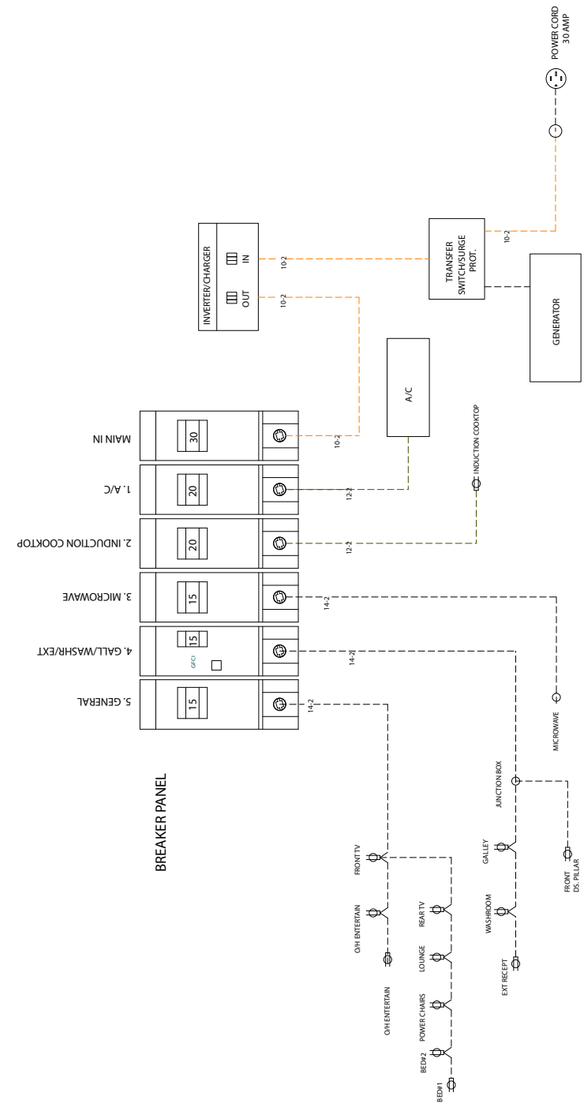
POWER CORD 30 AMP
INVERTER/CHARGER
IN
OUT
TRANSFER SWITCH/SURGE PROT.
GENERATOR
A/C
INDUCTION COOKTOP
MAIN IN
1. A/C
2. INDUCTION COOKTOP
3. MICROWAVE
4. GALL/WASHR/EXT
5. GENERAL
BREAKER PANEL
MICROWAVE
JUNCTION BOX
FRONT TV
O/H ENTERTAIN
REAR TV
LOUNGE
POWER CHAIRS
BEDW2
BEDW1
GALLEY
WASHROOM
EXT RECEPT
FRONT DS. PILLAR

PLUMBING

WATER LINES SCHEMATIC

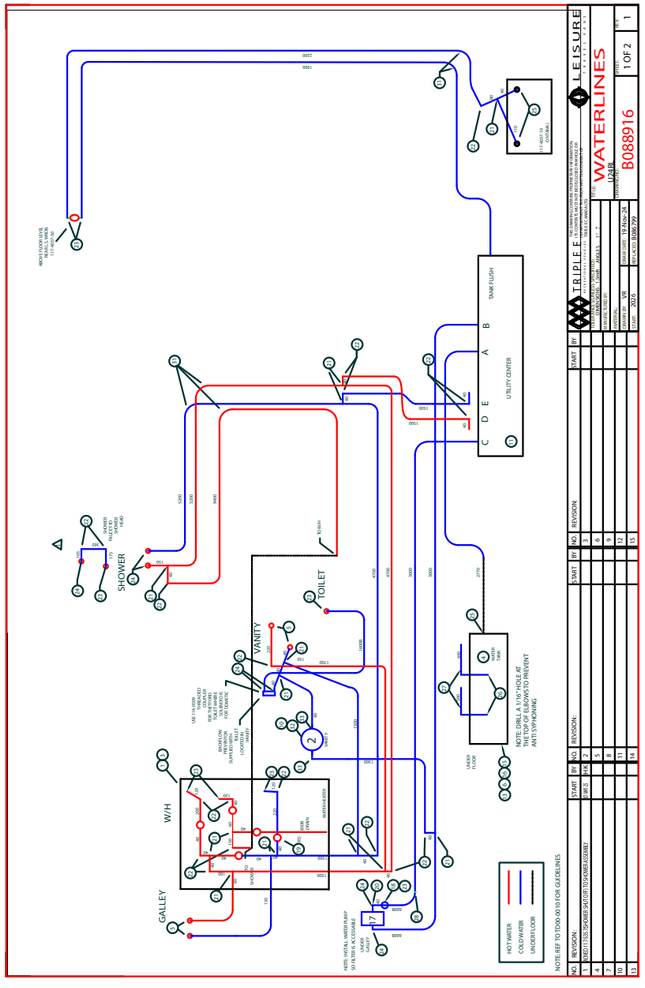

DRAIN LINE SCHEMATIC

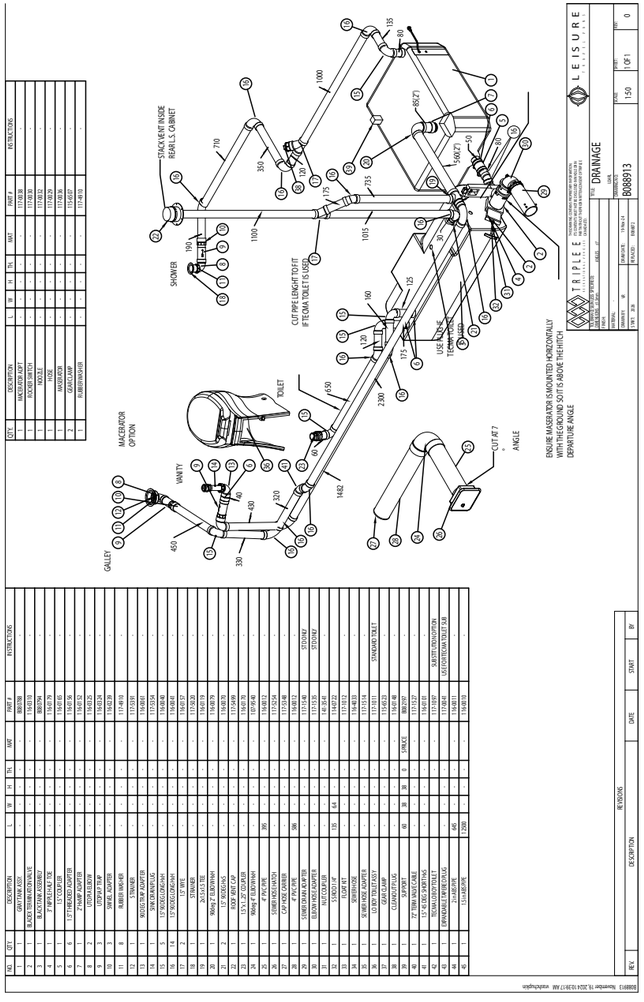

ENTERTAINMENT

NO.	QTY	PART NO.	DESCRIPTION
1	REF	109-1445	WINEGARD CONNECT 2.0
2	1	137-7567	ANTENNA BOOSTER SWITCH
3	REF	109-1518	JBL SOUNDBAR
4	1	109-0500	CAT 6 PATCH CORD
5	1	108-0251	15' HDMI CABLE
6	2	108-0273	10' TRM OPTICAL CABLE
7	2	108-1366	25' COAX W/ F-CONNECTORS
8	1	108-1502	90° SMA TO RP-SMA ADAPTER LEFT
9	1	126-4166	RECEPTACLE COVER
10	3	126-1019	COAX INSERT
11	1	126-1023	CAT 6 INSERT
12	1	126-1024	BLANK
13	2	126-1021	HDMI INSERT
14	1	126-2007	COAX PIGTAIL CONNECTIONS DECAL
15	REF	126-2306	EXT. CABLE OUTLET

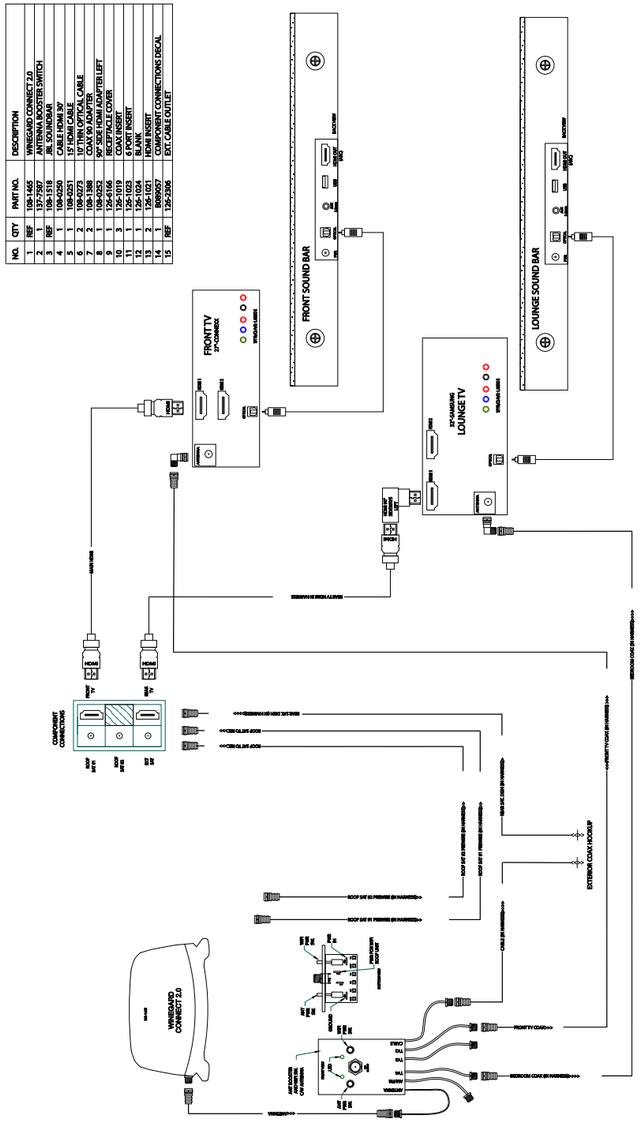
FRONT TV
2X HDMI
FRONT SOUND BAR
LOUNGE TV
LOUNGE SOUND BAR
COMPONENT CONNECTIONS
WINEGARD CONNECT 2.0
EXTERIOR COAX HOOKUP
ROOF SAT #1 PREWIRE (IN HARNESS)>>>
ROOF SAT #2 PREWIRE (IN HARNESS)>>>
FRONT TV COAX>>>
BEDROOM COAX (IN HARNESS)>>>
VIPER/GEN5 (IN HARNESS)>>>
CABLE (IN HARNESS)>>>
CABLE (IN HARNESS)>>>
CABLE

NOTES

NOTES

LEISURE

TRAVEL VANS

LTV Roadside Assistance

4287 Beltline Road, Box #198
Addison, TX 75001

for EMERGENCY ROADSIDE CALL
1•877•219•3831

Triple E Recreational Vehicles and Leisure Travel Vans are brands and trademarks of Triple E Canada Ltd.

301 Roblin Blvd., Box 1230 Winkler, MB Canada R6W 4C4
Telephone: 204-325-4361 Fax: 204-325-5241

US Address: P.O. Box 68 Walhalla, ND 58282

www.tripleerv.com • info@tripleerv.com • www.leisurevans.com • general@leisurevans.com

Product improvement is a continuing process at Triple E Recreational Vehicles.
We reserve the right to change specifications, operating instructions, standards and options on any products without prior notice. The information, illustrations and pictures within this document are current at the time of printing.

Copyright, Triple E Canada Ltd.
P/N146-4601-NOV25

Printed in Canada